PUBLISHED: 24-MAR-2017
2022.0 DEFENDER (LE), 307-01

AUTOMATIC TRANSMISSION/TRANSAXLE - VEHICLES WITH: 8HP70 8-SPEED AUTOMATIC TRANSMISSION AWD

TRANSMISSION CONTROL MODULE AND MAIN CONTROL VALVE BODY (G1976220)

REMOVAL AND INSTALLATION

44.24.05	GASKET-OIL/FLUID PAN - RENEW	3000 CC, TDV6	2.1	USED WITHINS	
44.40.01	VALVE BODY ASSEMBLY - RENEW	3000 CC, TDV6	2.1	USED WITHINS	

SPECIAL TOOL(S)



JLR-308-844

Remover/Installer, Transmission Control Module Electrical Connector

transmissionmanual.com

GENERAL EQUIPMENT

EQUIPMENT NAME
Land Rover diagnostic equipment

PART(S)

STEP	PART NAME	QUANTITY
Installation Step 1	Transmission control valve kit	1
Installation Step 8	Transmission control module and main control valve body bolts	1

REMOVAL

CAUTION:

Make sure all suitable safety precautions are taken to protect the TCM and main control valve body electrical connector pins against electrostatic discharge.

NOTE:

Some variation in the illustrations may occur, but the essential information is always correct.

transmissionmanuals.com

1.

WARNING:

Make sure to support the vehicle with axle stands.

Raise and support the vehicle.

2. Remove the transmission fluid pan.
Refer to: Transmission Fluid Pan, Gasket and Filter (307-01 Automatic Transmission/Transaxle - Vehicles With: 8HP70 8-Speed Automatic Transmission AWD, Removal and Installation).

3.

CAUTION:

Take precautions to avoid any electrostatic charging, which could damage this component.

NOTE:

If equipped.

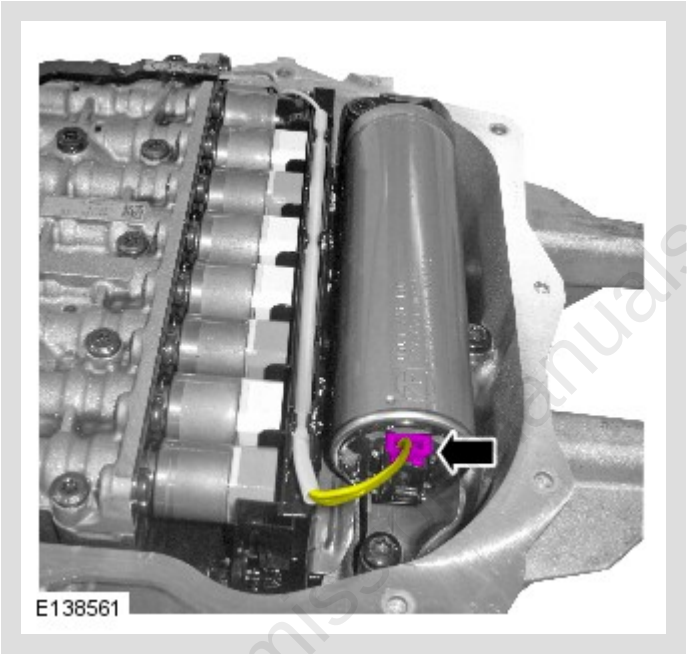

Disconnect the electrical connector.

transmissionmanuals.com

4.

NOTE:

If equipped.

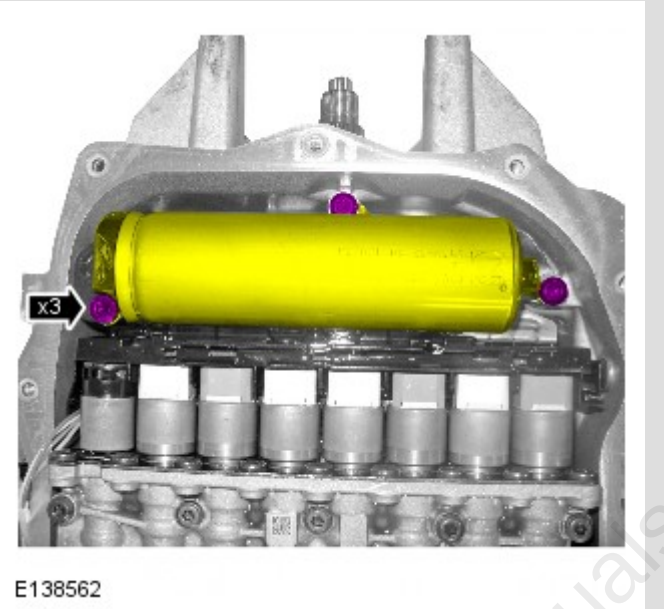

Remove the three Torx bolts.

transmissionmanuals.com

5.

CAUTION:

Remove and discard the O-ring seals.

NOTE:

If equipped.



Remove the component.

transmissionmanuals.com

6.

CAUTION:

Make sure all suitable safety precautions are taken to protect the TCM and main control valve body electrical connector pins against electrostatic discharge.

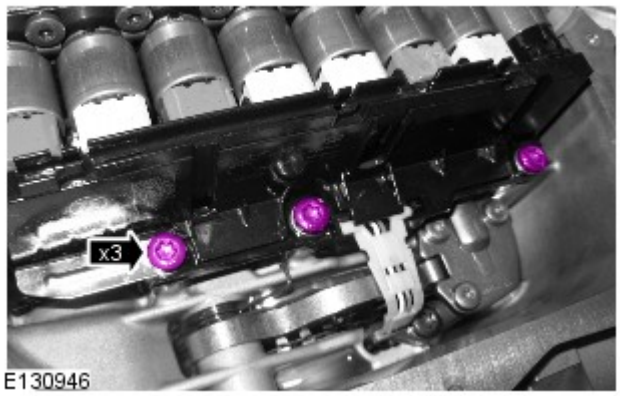

Remove and discard the three Torx bolts.

7.

CAUTION:

Discard the bolt.

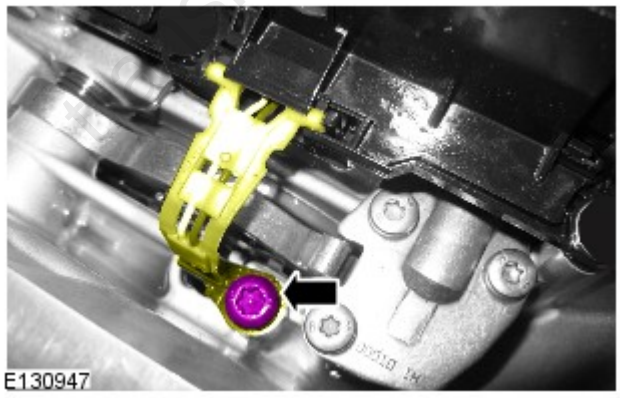

Remove and discard the Torx bolt.

transmissionmanuals.com

8.

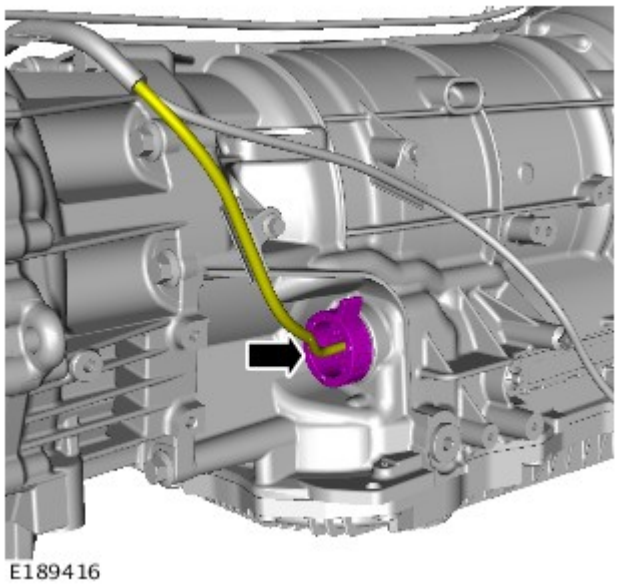

Disconnect the electrical connector.

9.

NOTE:

Note the orientation of the component prior to removal.

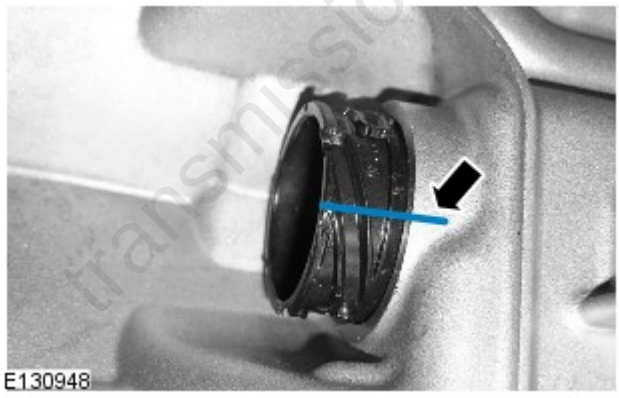

transmissionmanuals.com

10.



11.

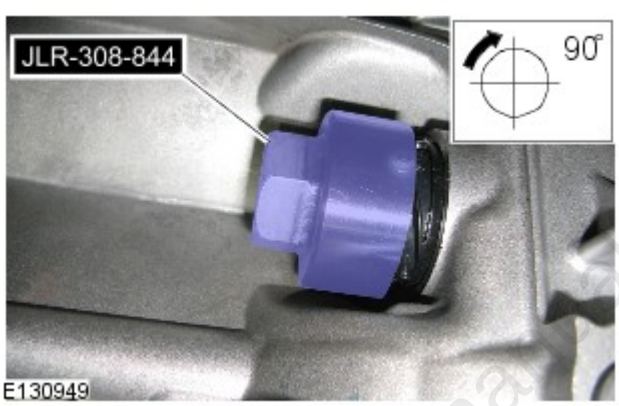

Install the special tool as shown.

Special Tool(s): JLR-308-844

12.

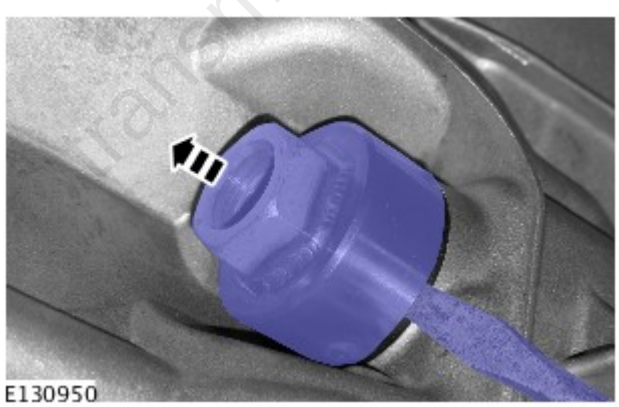

Using a suitable tool, remove the component.

Special Tool(s): JLR-308-844

transmissionmanuals.com

13.

CAUTION:

Discard the bolts.

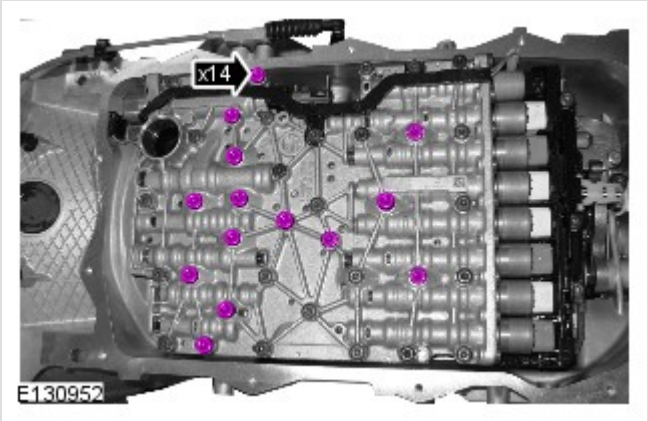

Remove the 14 Torx bolts.

transmissionmanuals.com

14.

WARNING:

Be prepared to collect escaping fluid.

NOTE:

Note the position of the manual park brake release.



Remove the valve body assembly.

INSTALLATION

1.

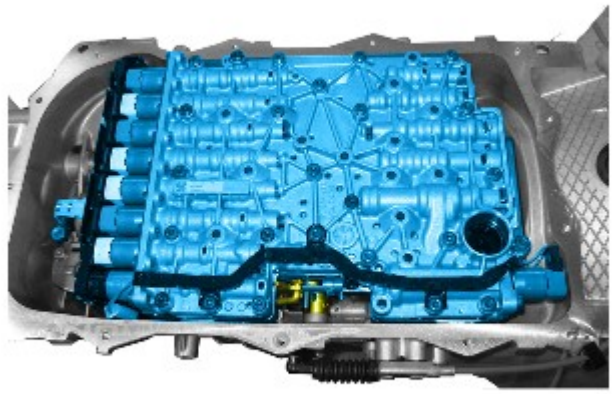

E150701

Install the valve body assembly.

Renew Part: Transmission control valve kit Quantity: 1 .

transmissionmanuals.com

2.

NOTE:

Make sure that the component is installed to the noted removal position.



Make sure the manual park brake release is installed correctly.

transmissionmanuals.com

3.



- Install the special tool
  Special Tool(s): JLR-308-844

4.

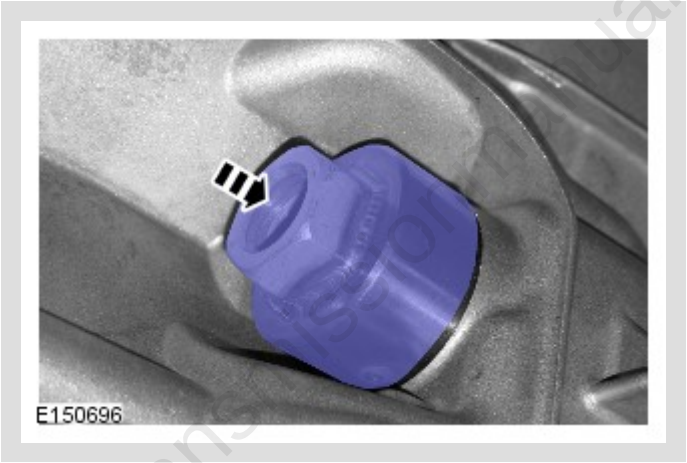

Install the component using the special tool.
Special Tool(s): JLR-308-844

transmissionmanuals.com

5.

CAUTION:

Make sure that the electrical connector is installed in the correct orientation as noted in the removal step.

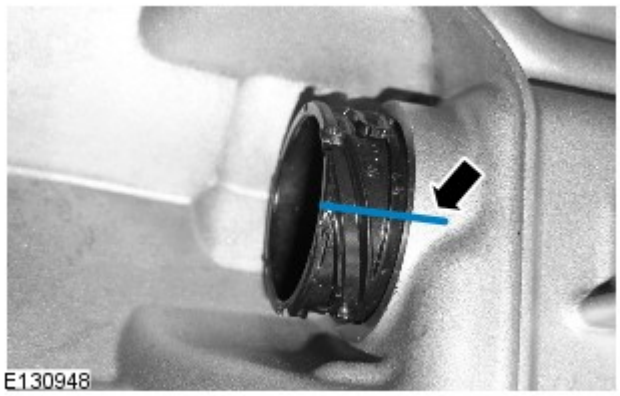

6.



transmanuals.com

7.

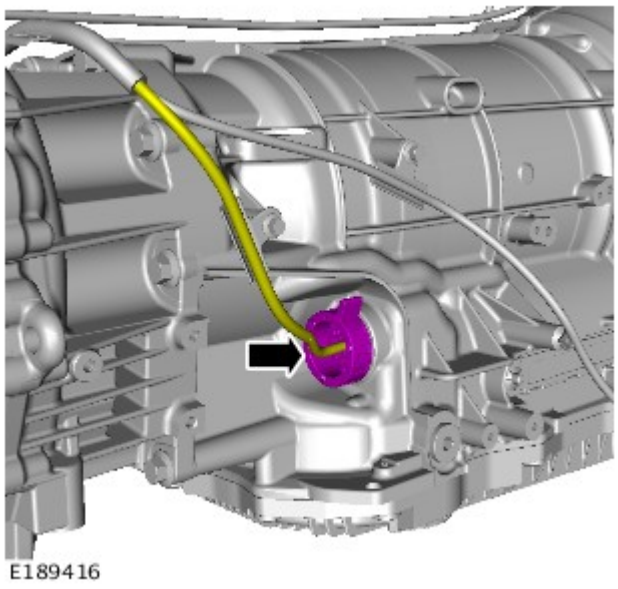

Connect the electrical connector.

transmissionmanuals.com

8.

CAUTION:

Make sure that new bolts are installed.

NOTE:

Tighten the retaining bolts evenly and progressively.

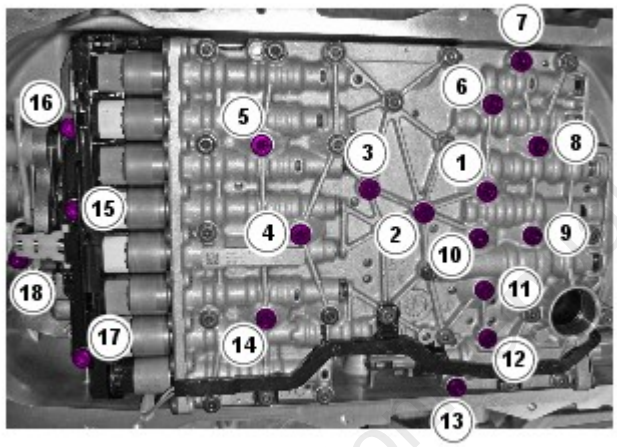

E130933

Tighten the bolts in the sequence shown.

Renew Part: *Transmission control module and main control valve body bolts*

Quantity: *1* .

Torque: **8 Nm**

transmissionplus.com

9.

CAUTION:

A new O-ring seal is to be installed.

NOTE:

If equipped.



Install the component.

transmissionmanuals.com

10.

NOTE:

If equipped.

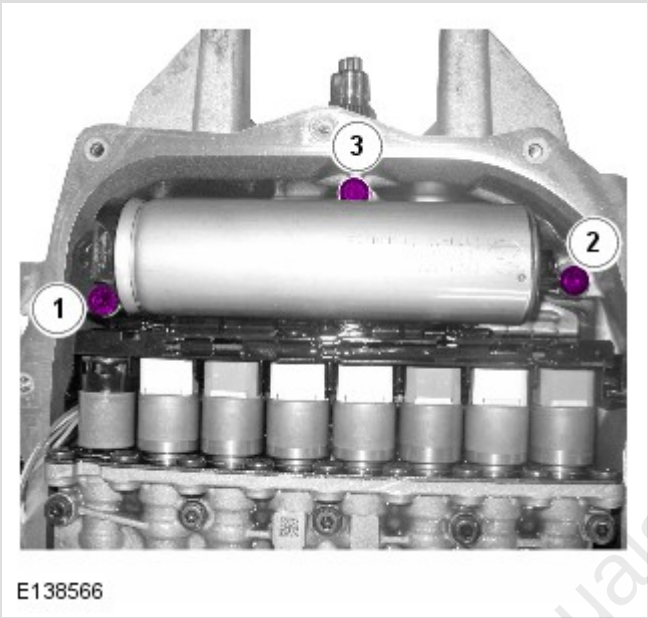

Install the three Torx bolts.

Torque: **8 Nm**

transmissionmanuals.com

11.

NOTE:

If equipped.

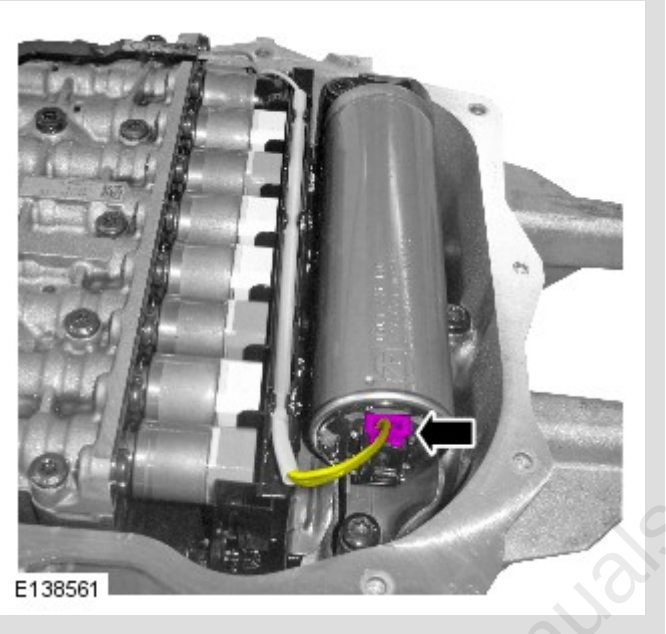

Connect the electrical connector.

12. Install the transmission fluid pan.
Refer to: Transmission Fluid Pan, Gasket and Filter (307-01 Automatic Transmission/Transaxle - Vehicles With: 8HP70 8-Speed Automatic Transmission AWD, Removal and Installation).

13. Using the diagnostic tool, calibrate the main control valve body and the transmission control module (TCM).
General Equipment: Land Rover diagnostic equipment

transmissionmanuals.com